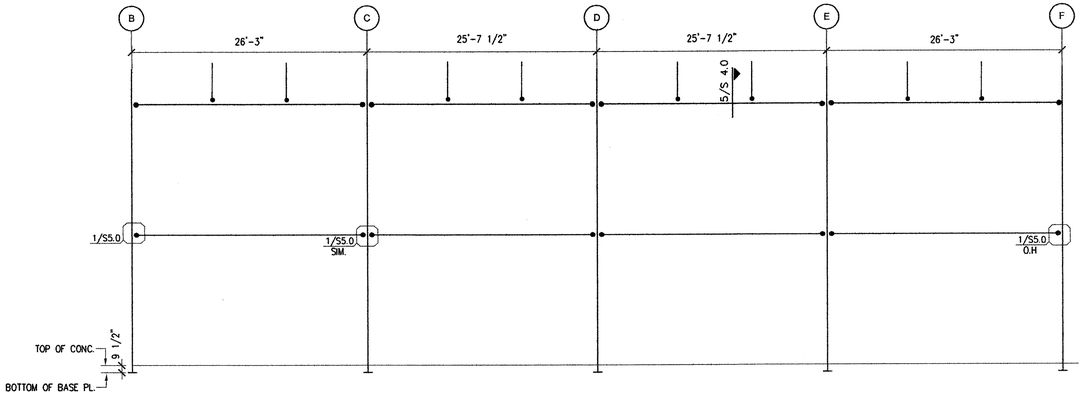

1 FRAME @ GRID 1
SCALE: 1/8" = 1'=0"

NOTES:
1. ● — INDICATES MOMENT CONNECTION

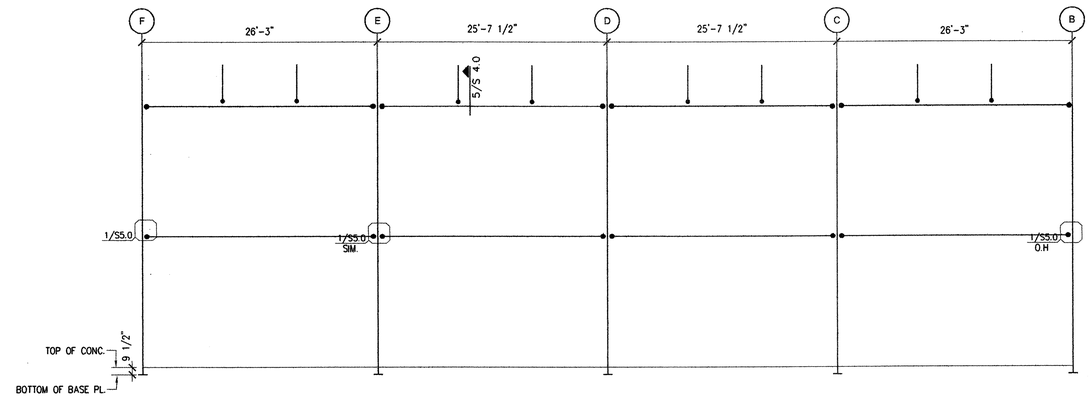

2 FRAME @ GRID 4
SCALE: 1/8" = 1'=0"

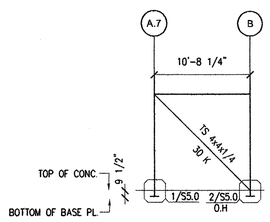

3 FRAME @ GRID 1.9
SCALE: 1/8" = 1'=0"
NOTE:
1. BRACE CONNECTION SHALL BE DESIGNED FOR FORCES INDICATED.

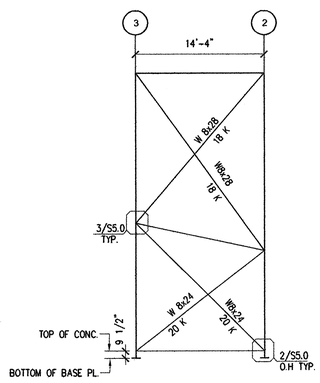

4 FRAME @ GRID B
SCALE: 1/8" = 1'=0"
NOTE:
1. BRACE CONNECTION SHALL BE DESIGNED FOR FORCES INDICATED.

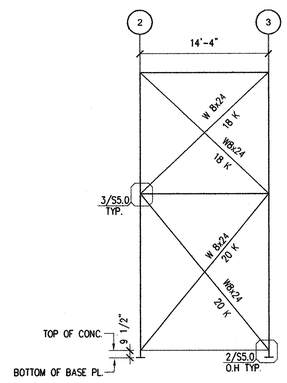

5 FRAME @ GRID F
SCALE: 1/8" = 1'=0"
NOTE:
1. BRACE CONNECTION SHALL BE DESIGNED FOR FORCES INDICATED.

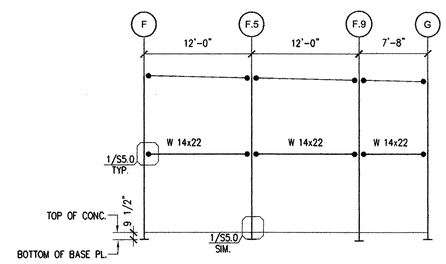

6 FRAME @ GRID 1.5
SCALE: 1/8" = 1'=0"

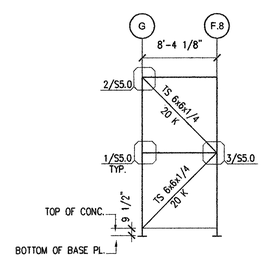

7 FRAME @ GRID 3.6
SCALE: 1/8" = 1'=0"
NOTE:
1. BRACE CONNECTION SHALL BE DESIGNED FOR FORCES INDICATED.

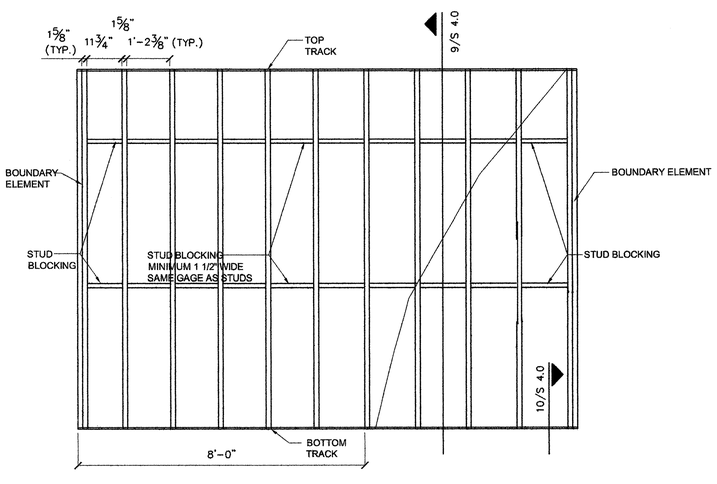

8 SHEAR WALL - LIGHT GAGE STUD AND SHEATHING
SCALE: 1/2" =1'-0"

NOTES:
1. GYPSUM SHEATHING SHALL BE APPLIED PERPENDICULAR TO FRAMING

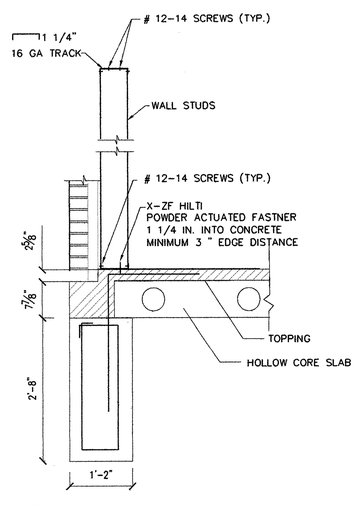

9
SCALE: 3/4" = 1'-0"

SHEAR WALL SCHEDULE

WALL MARK	FRAMING MEMBERS SIZE AND SPACING						SHEATHING AND FASTNERS		HOLDOWN
	DEPTH IN.	FLANGE IN.	LIP IN.	GAGE	SPACING IN. O.C.	BOUNDARY MEMBERS & TIE DOWN EACH END	INSIDE	OUTSIDE	
SW1	8	1 5/8	3/8	16	18	2 FRAMING STUDS	1/2" GYP. BOARD No. 6x1" SCREW @ 4" O.C.	7/16" RATED SHATHING W/#8 FLAT HEAD SCREW 0.292 HEAD DIA @ 6" O.C.	S/HTT14
SW2	6	1 5/8	3/8	16	16	2 FRAMING STUDS	1/2" GYP. BOARD No. 6x1" SCREW @ 4" O.C.	7/16" RATED SHATHING W/#8 FLAT HEAD SCREW 0.292 HEAD DIA @ 6" O.C.	S/HTT14
SW3	4	1 5/8	3/8	20	16	2 FRAMING STUDS	1/2" GYP. BOARD No. 6x1" SCREW @ 4" O.C.	7/16" RATED SHATHING W/#8 FLAT HEAD SCREW 0.292 HEAD DIA @ 6" O.C.	S/LTT20
SW4	8	1 5/8	3/8	16	18	2 FRAMING STUDS	1/2" GYP. BOARD No. 6x1" SCREW @ 4" O.C.	1/2" GYP. BOARD No. 6x1" SCREW @ 4" O.C.	S/HTT14

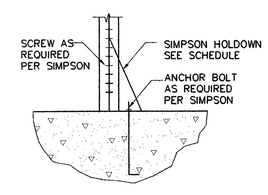

10 HOLDOWN
SCALE : 1" = 1'-0"

APPROVED
FOR BUILDING PERMIT ONLY
CITY OF HOUSTON
CODE ENFORCEMENT DIVISION
The owner is responsible for compliance with the Building Code. Such approved plans and specifications shall not be changed, modified or altered without authorizations from the building official, and all work shall be done in accordance with the approved plans.
NO. 368

Community Family Centers
Centros Familiares de la Comunidad

John P. McGovern, M.D. Community Sports & Recreation Building
7318 AVENUE F
HOUSTON, TEXAS 77011

THATS ARCHITECTURE
2402 COMMONWEALTH #100, HOUSTON, TX 77006
TELEPHONE 713/222-1406 FAX 713/222-1506

STATE OF TEXAS
R.D.PATEL
85114
LICENSED ARCHITECT
8/7/06

ISSUES & REVISIONS

1	8/7/06	ISSUED FOR PERMIT

SHEET TITLE
BRACE ELEVATION AND SHEAR WALL DETAILS

PROJECT NO. 2001-30
SCALE AS NOTED

SHEET NUMBER
S 4.0