COLUMN SCHEDULE

	COLUMN LOCATION	B-1, C-1, D-1, E-1, F-1	B-4, C-4, D-4, E-4, F-4	B-2, B-3	F-2, F-3	F-1.5, F.5-1.5 F.8-1.5,G-1.5 G-2.5,G-3.6 F.7-3.6	A-1.9, A.6-1.9, B-1.9, A-5, G-5,A.3-2, A.5-A.4, F.6-4.5	A.4-1.9,A-3.2 A-3.9,A-4.6, A.8-5,B.5-5, C.5-5, D.5-5, F.5-5, F.4-5, F.9-4.3		
	GYM. ROOF LV.									
	GROUND FLOOR	W14x61	W14x61	TS 8x8x3/8	TS 8x8x3/8	TS 8x8x1/4	TS 4x4x1/4	3" DIA. SCHED. 40		
	BOTT./BASE PL.									
	BASE PLATE BxtxN (IN INCH)	20"x3/4"x1-8"	20"x3/4"x1-8"	14"x3/4"x1-2"	14"x3/4"x1-2"	14"x3/4"x1-2"	10"x5/8"x10"	9"x5/8"x9"		
	ANCHOR BOLTS NUMBER AND SIZE	4 -3/4" DIA.	4 -3/4" DIA.	4 -3/4" DIA.	4 -3/4" DIA.	4 -3/4" DIA.	4 -3/4" DIA.	4 -3/4" DIA.		
	ANCHOR BOLTS ASTM	A 325	A 325	A 307	A 307	A 325	A 307	A 307		
	ANCHOR BOLT LENGTH (L)	1'-6"	1'-6"	1'-6"	1'-6"	1'-6"	1'-4"	1'-4"		
	PROJECTION IN INCHES (P)	4 1/2"	4 1/2"	4 1/2"	4 1/2"	4 1/2"	4 1/2"	4"		
	HOOK SIZE IN INCHES (H)	6"	6"	6"	6"	6"	4"	4"		

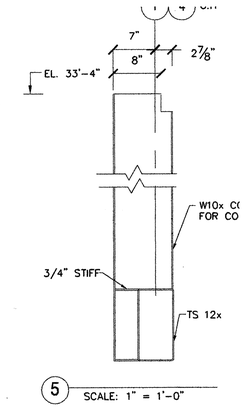

5 SCALE: 1" = 1'-0"

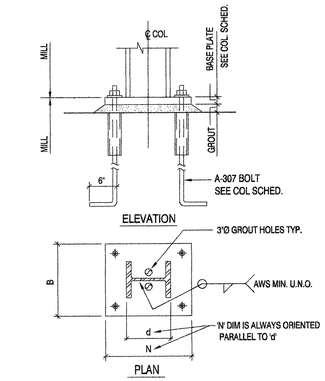

1 TYP. COL. BASE PLATE & ANCH. BOLT DETAIL

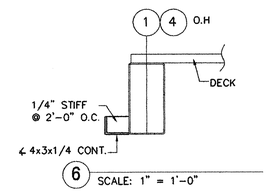

6 SCALE: 1" = 1'-0"

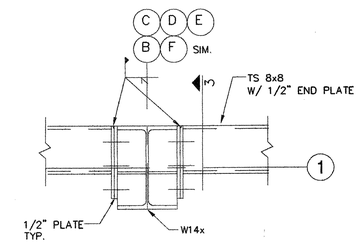

2 PLAN
SCALE: 1" = 1'-0"

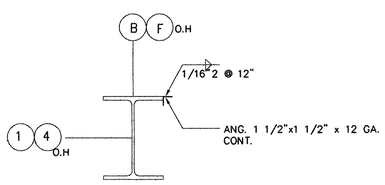

11 PLAN
SCALE: 1" = 1'-0"

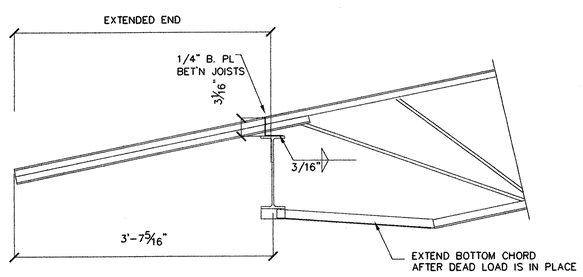

9 SCALE: 1" = 1'-0"

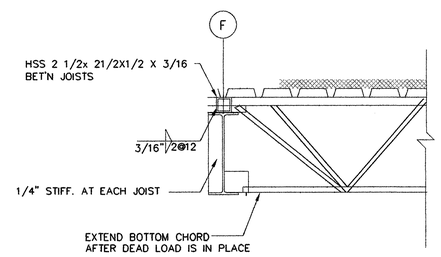

7 SCALE: 1" = 1'-0"

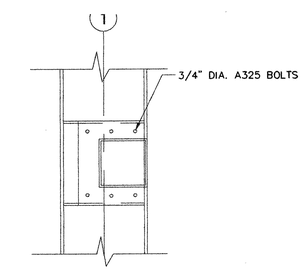

3 SCALE: 1" = 1'-0"

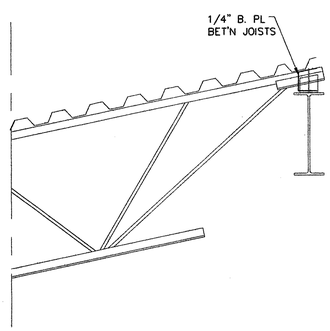

10 SCALE: 1" = 1'-0"

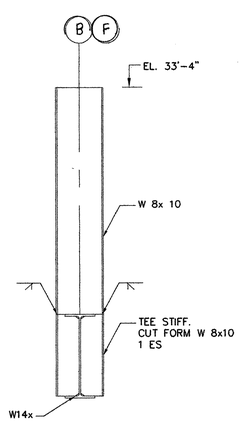

8 SCALE: 1" = 1'-0"

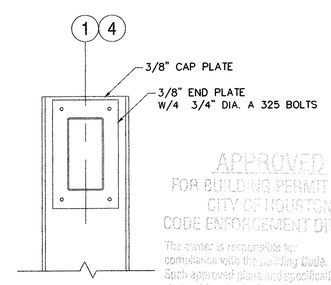

4 SCALE: 1" = 1'-0"

APPROVED
FOR BUILDING PERMIT ONLY
CITY OF HOUSTON
CODE ENFORCEMENT DIVISION
The owner is responsible for compliance with the building code. Such approved plans and specifications shall not be changed, modified or altered without authorization from the building official, and all work shall be done in accordance with the approved plans.
NO. 363

Community Family Centers
Centros Familiares de la Comunidad

John P. McGovern, M.D.
Community Sports &
Recreation Building
7318 AVENUE F
HOUSTON, TEXAS 77011

THATS ARCHITECTURE
2402 COMMONWEALTH #100, HOUSTON, TX 77006
TELEPHONE 713/222-1406 FAX 713/222-1506

STATE OF TEXAS
R.D.PATEL
8114
LICENSED
ARCHITECT
8/11/06

ISSUES & REVISIONS

1	8/7/06	ISSUED FOR PERMIT

SHEET TITLE
COLUMN SCHEDULE AND DETAILS

PROJECT NO. 2001-30
SCALE AS NOTED

SHEET NUMBER
S 3.0