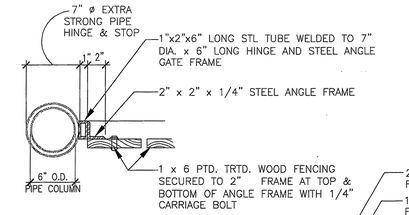

B GATE HINGE DETAIL

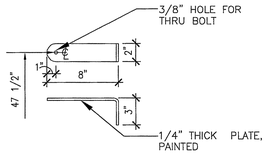

C SWING LATCH

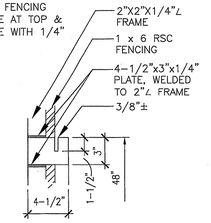

NOTE:
MOUNT 48" ABOVE FINISHED GRADE TO TOP OF PLATE

D STOP PLATE

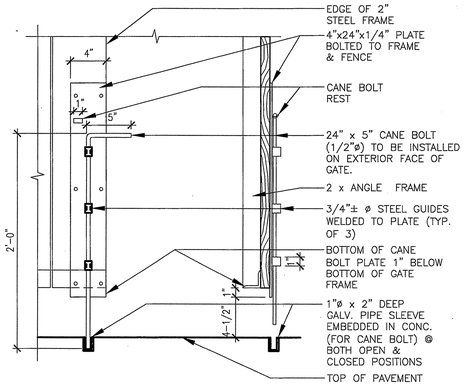

A CANE BOLT (1 PER GATE)

NOT TO SCALE

DETAILS HARDWARE 08

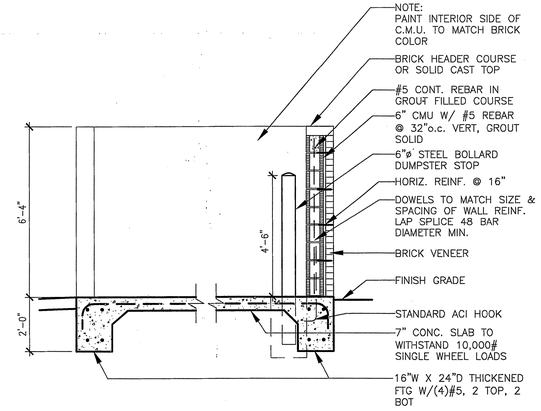

0 2'8" 5'4"
SCALE: 3/8" = 1'0"

DUMPSTER ENCLOSURE SECTION 11

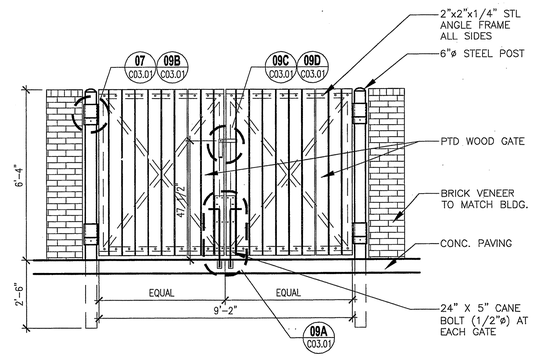

NOTE: SIDE ELEVATIONS ALL BRICK VENEER

0 2'8" 5'4"
SCALE: 3/8" = 1'0"

DUMPSTER ENCLOSURE FRONT ELEVATION 10

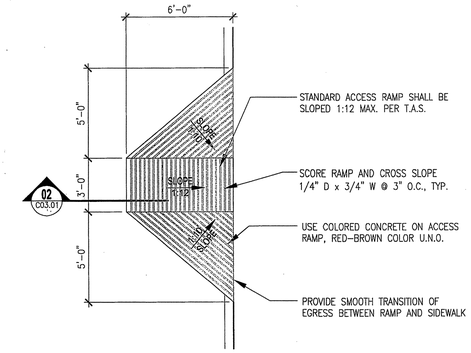

0 4'0" 8'0"
SCALE: 1/4" = 1'0"

CURB RAMP 09

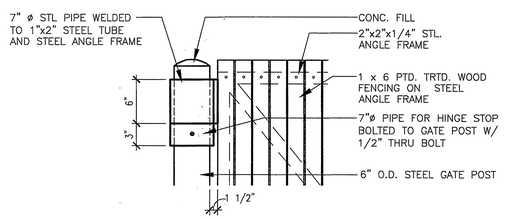

GENERAL NOTES:
1.) 6" O.D. STEEL POSTS SHALL BE SET A MINIMUM OF 36" INTO CONCRETE.
2.) BRICK COLOR TO MATCH THE BRICK ON THE BUILDING, U.N.O.
3.) INSTALL 1x6 BOARDS 1/4" APART. PAINT TRASH ENCLOSURE GATE WOOD BOARDS, POST, HINGES AND ACCESSORIES.

0 2'0" 4'0"
SCALE: 1/2" = 1'0"

HINGE DETAIL 07

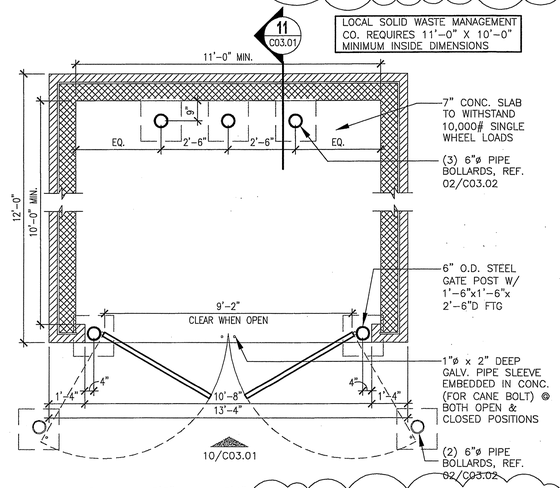

0 2'8" 5'4"
SCALE: 3/8" = 1'0"

DUMPSTER ENCLOSURE PLAN 06

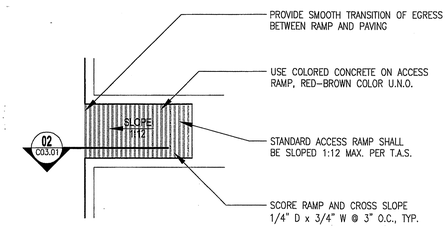

0 4'0" 8'0"
SCALE: 1/4" = 1'0"

CURB RAMP 05

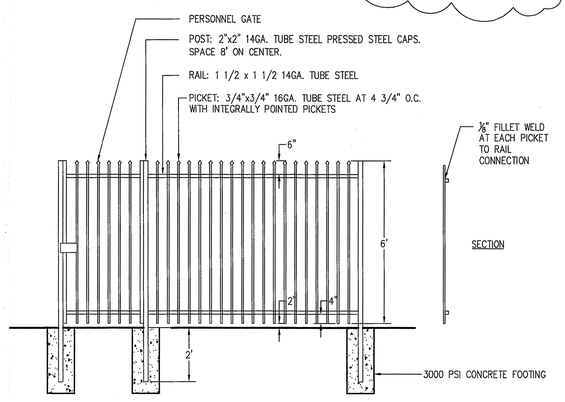

0 2'8" 5'4"
SCALE: 3/8" = 1'0"

FENCE ELEVATION AND SECTION 04

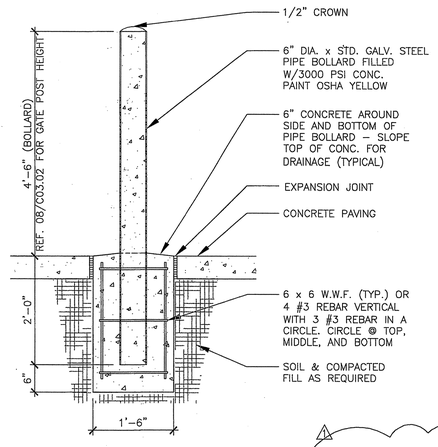

0 1'4" 2'8"
SCALE: 3/4" = 1'0"

BOLLARD/GATE POST DETAIL 03

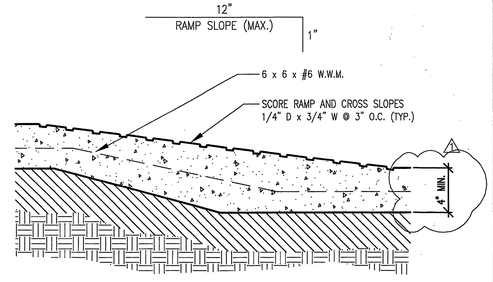

0 8" 1'4"
SCALE: 1-1/2" = 1'0"

TYP. SECTION @ CURB RAMP 02

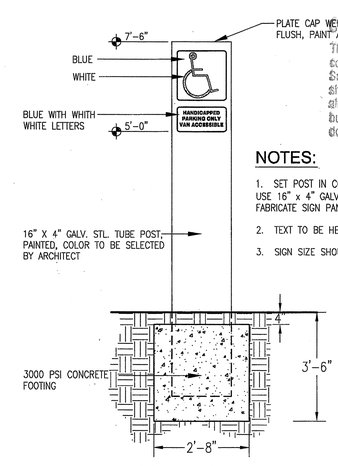

APPROVED
FOR BUILDING PERMIT ONLY
CITY OF HOUSTON
ENFORCEMENT DIVISION
The owner is responsible for compliance with the Building Code. Such approved plans and specifications shall not be changed, modified or altered without authorizations from the building official, and all work shall be done in accordance with the approved plans.
NO. 368

NOTES:

1. SET POST IN CONCRETE TO A MINIMUM DEPTH OF 3'-0". USE 16" x 4" GALV. STEEL TUBE FOR SIGN POST, PAINT. FABRICATE SIGN PANELS OF .063 ALUMINUM.
2. TEXT TO BE HELVETICA MEDIUM, UPPER AND LOWER CASE.
3. SIGN SIZE SHOULD BE CHOSEN FOR SPECIFIC LOCATION.

0 2'0" 4'0"
SCALE: 1/2" = 1'0"

SITE SIGNAGE 01

Community Family Centers
Centros Familiares de la Comunidad

John P. McGovern, M.D.
Community Sports & Recreation Building
7318 AVENUE F
HOUSTON, TEXAS 77011

THATS ARCHITECTURE
2402 COMMONWEALTH #100, HOUSTON, TX 77006
TELEPHONE 713/222-1406 FAX 713/222-1506

STATE OF TEXAS REGISTERED ARCHITECT MARCO GLASER CANNOTTO
2/20/07

ISSUES & REVISIONS		
	09/16/06	ISSUE FOR PERMIT
1	02/26/07	CITY COMMENTS

SHEET TITLE
ARCHITECTURAL SITE DETAILS

PROJECT NO. 2001-30
SCALE AS NOTED

SHEET NUMBER
C03.01