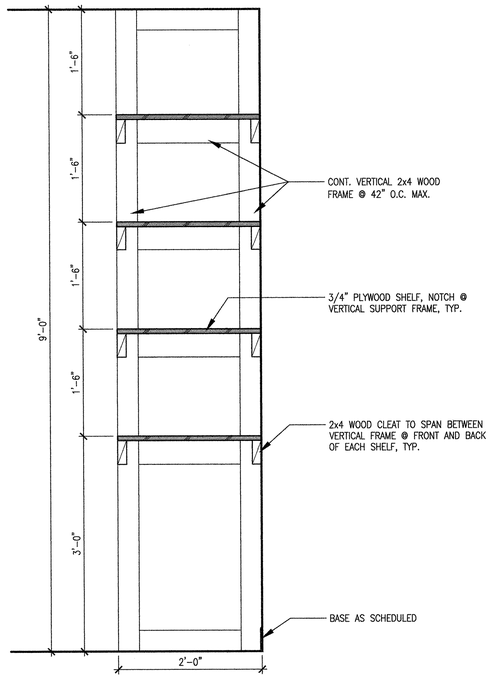

NOTES:
1. ALL WOOD TO BE PAINT GRADE.

0 1'0" 2'0"
SCALE: 1" = 1'0"

SHELVING @ FOOD STORAGE (08)

NOT USED (11)

NOTES:
1. REFER TO 01/A07.05 FOR TYPICAL NOTES.

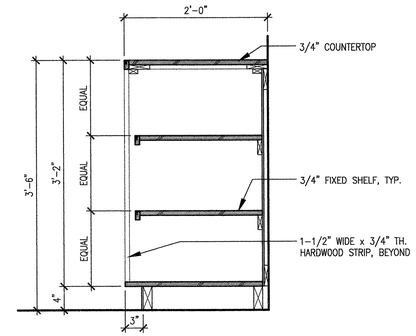

0 1'0" 2'0"
SCALE: 1" = 1'0"

CABINET W/ SHELVES @ STAFF WORKROOM (10)

NOTES:
1. REFER TO 01/A07.05 FOR TYPICAL NOTES.

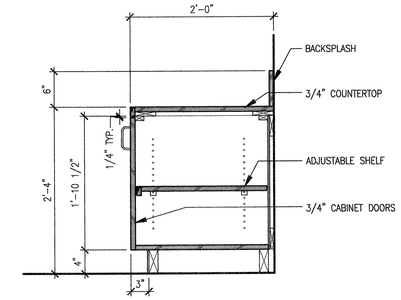

0 1'0" 2'0"
SCALE: 1" = 1'0"

BASE CABINET @ STAFF WORKROOM (09)

NOTES:
1. REFER TO 01/A07.05 FOR TYPICAL NOTES.

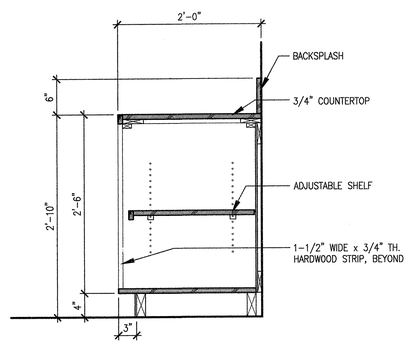

0 1'0" 2'0"
SCALE: 1" = 1'0"

BREAK ROOM CABINET W/ ADJUSTABLE SHELF (07)

NOTES:
1. REFER TO 01/A07.05 FOR TYPICAL NOTES.

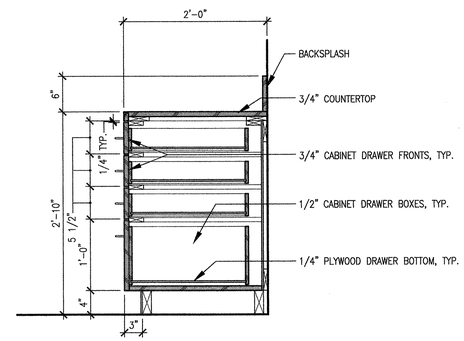

APPROVED
FOR BUILDING PERMIT ONLY
CITY OF HOUSTON
CODE ENFORCEMENT DIVISION
The owner is responsible for compliance with the Building Code. Such approved plans and specifications shall not be changed, modified or altered without authorizations from the building official, and all work shall be done in accordance with the approved plans.
NO. 368

0 1'0" 2'0"
SCALE: 1" = 1'0"

BREAK ROOM CABINET W/ 3 DRAWERS (06)

NOTES:
1. REFER TO A08.01 FOR FINISH INFORMATION.

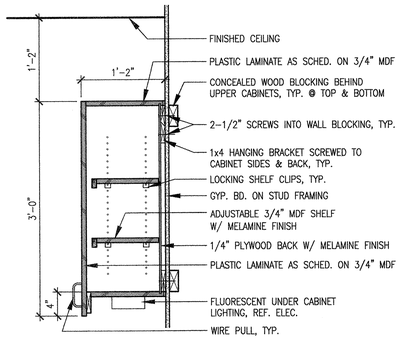

0 1'0" 2'0"
SCALE: 1" = 1'0"

TYPICAL UPPER CABINET (05)

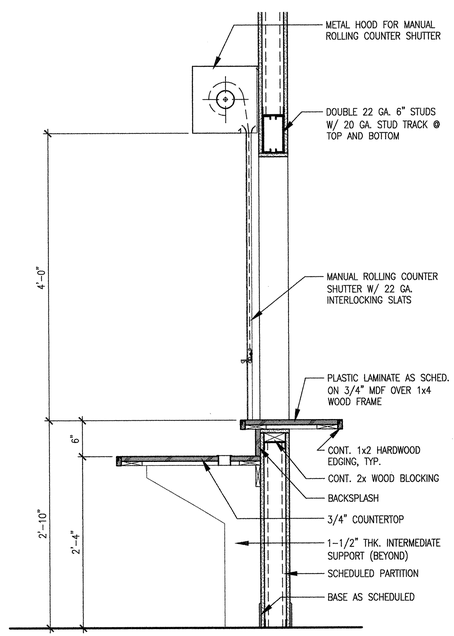

NOTES:
1. REFER TO 03/A07.05 FOR TYPICAL NOTES.
2. NO BACKSPLASH @ SIMILAR.

0 1'0" 2'0"
SCALE: 1" = 1'0"

COUNTERTOP & COILING SHUTTER @ BREAK ROOM (04)

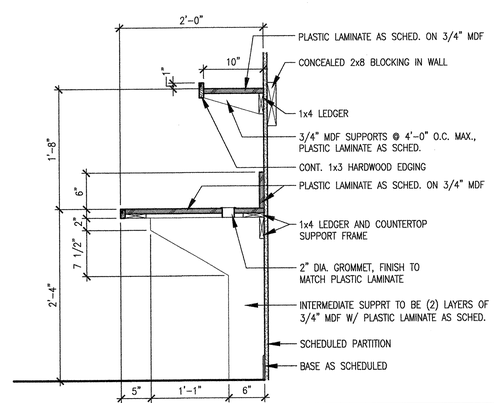

NOTES:
1. REFER TO A08.01 FOR FINISH INFORMATION.
2. NO SHELF @ SIMILAR.

0 1'0" 2'0"
SCALE: 1" = 1'0"

TYPICAL WORKSTATION (03)

NOTES:
1. REFER TO 01/A07.05 FOR TYPICAL NOTES.

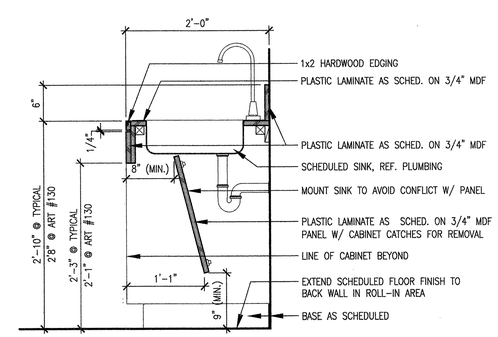

0 1'0" 2'0"
SCALE: 1" = 1'0"

TYPICAL SINK COUNTERTOP (02)

NOTES:
1. REFER TO A08.01 FOR FINISH INFORMATION.

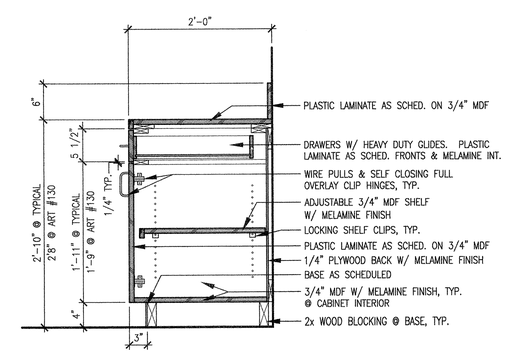

0 1'0" 2'0"
SCALE: 1" = 1'0"

TYPICAL BASE CABINET (01)

Community Family Centers
Centros Familiares de la Comunidad

John P. McGovern, M.D. Community Sports & Recreation Building
7318 AVENUE F
HOUSTON, TEXAS 77011

THAT'S ARCHITECTURE
2402 COMMONWEALTH #100, HOUSTON, TX 77006
TELEPHONE 713/222-1406 FAX 713/222-1506

REGISTERED ARCHITECT NANCY GLASER CHAPMAN 15004 STATE OF TEXAS
4/10/06

ISSUES & REVISIONS
09/16/06 ISSUE FOR PERMIT

SHEET TITLE
MILLWORK SECTIONS

PROJECT NO. 2001-30
SCALE AS NOTED

SHEET NUMBER
A07.05