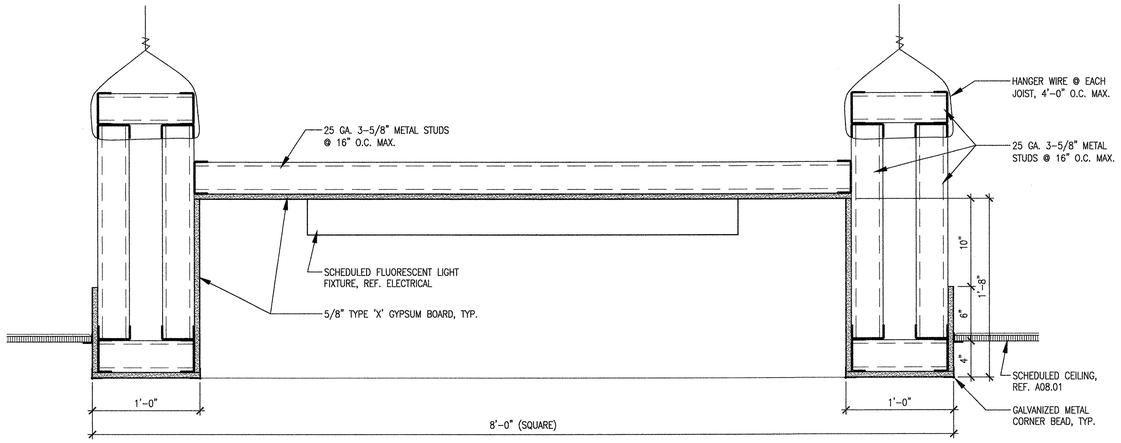

0 8" 1'4"
SCALE: 1-1/2" = 1'0"

FURR DOWN @ RESOURCE AREA (11)

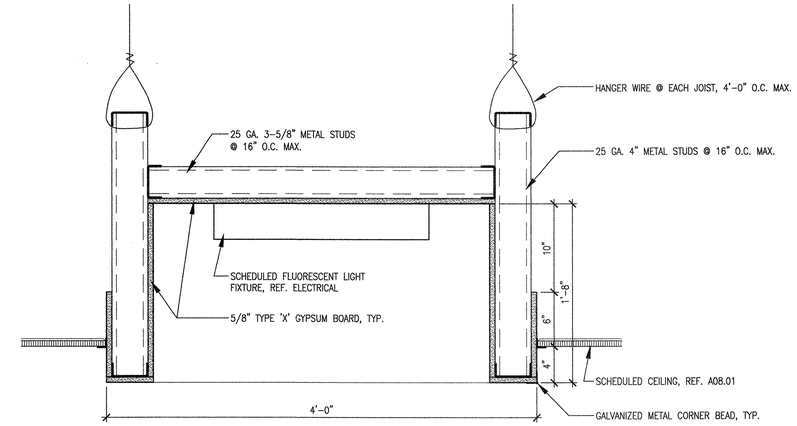

0 8" 1'4"
SCALE: 1-1/2" = 1'0"

FURR DOWN @ CORRIDOR (09)

NOTES:
1. REFER TO A08.01 FOR FINISH INFORMATION.

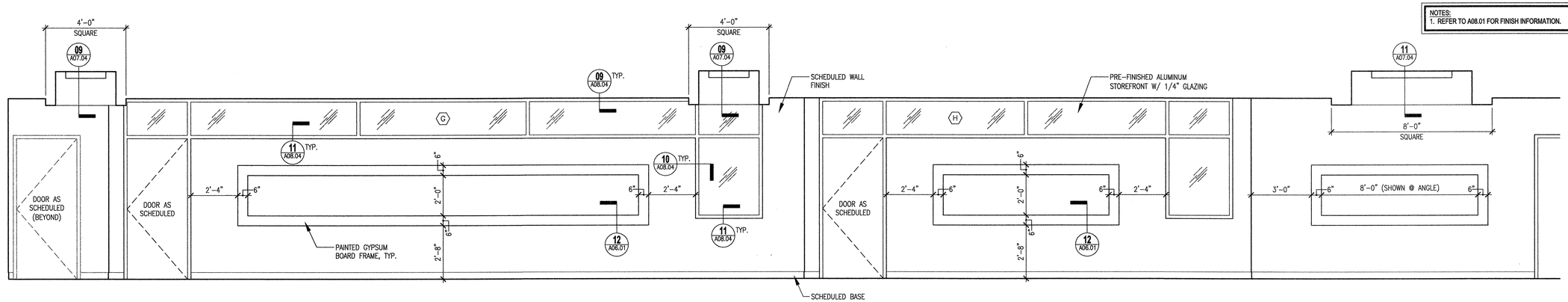

0 4'0" 8'0"
SCALE: 1/4" = 1'0"

CORRIDOR #135 - WEST WALL (05)

APPROVED
FOR BUILDING PERMIT ONLY
CITY OF HOUSTON
CODE ENFORCEMENT DIVISION
The owner is responsible for compliance with the Building Code. Such approved plans and specifications shall not be changed, modified or altered without authorizations from the building official, and all work shall be done in accordance with the approved plans.
NO. 366

NOTES:
1. REFER TO A08.01 FOR FINISH INFORMATION.

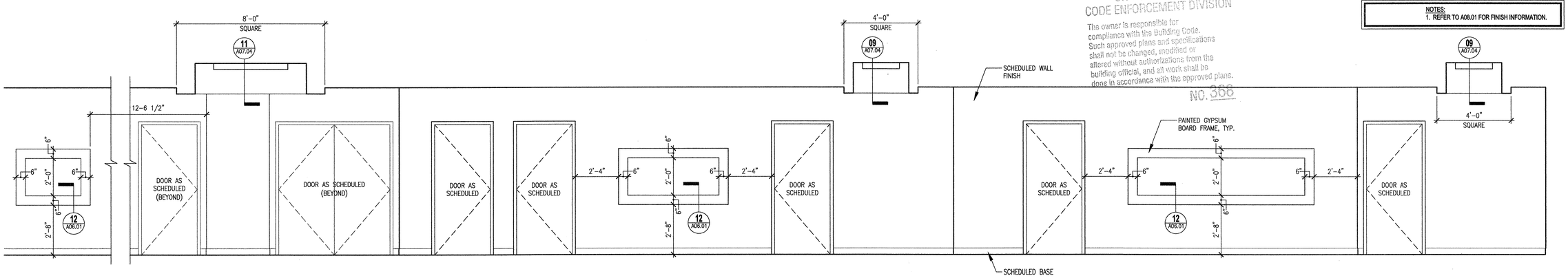

0 4'0" 8'0"
SCALE: 1/4" = 1'0"

CORRIDOR #135 - EAST WALL (01)

Community Family Centers
Centros Familiares de la Comunidad

John P. McGovern, M.D. Community Sports & Recreation Building
7318 AVENUE F
HOUSTON, TEXAS 77011

THAT'S ARCHITECTURE
2402 COMMONWEALTH #100, HOUSTON, TX 77006
TELEPHONE 713/222-1406 FAX 713/222-1506

STATE OF TEXAS REGISTERED ARCHITECT
NANCY GLASER GANDEAU
15004
4/18/06

ISSUES & REVISIONS	
09/16/06	ISSUE FOR PERMIT

SHEET TITLE
ENLARGED PLANS & INTERIOR ELEVATIONS

PROJECT NO. 2001-30
SCALE AS NOTED

SHEET NUMBER
A07.04