NOT USED (10)

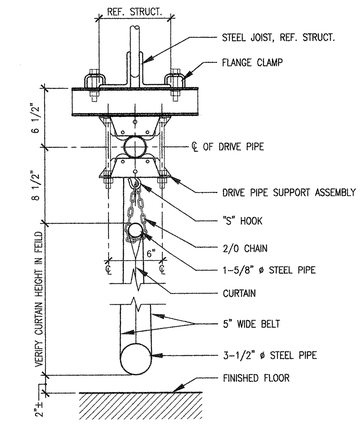

0 8" 1'4"
SCALE: 1-1/2" = 1'0"

ROLL-UP GYMNASIUM DIVIDER SECTION (09)

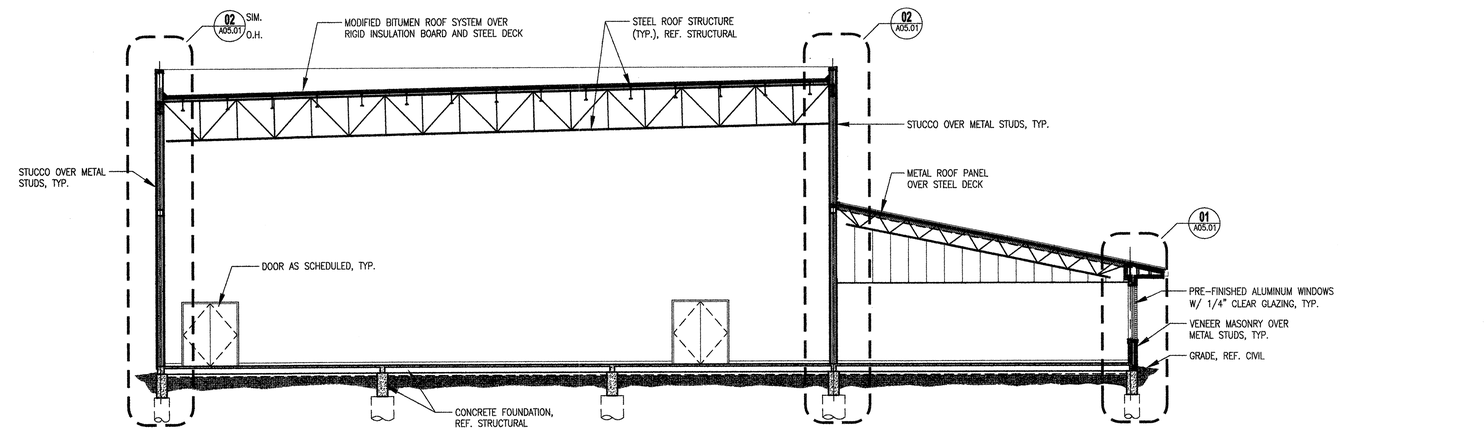

0 8'0" 16'0"
SCALE: 1/8" = 1'0"

BUILDING SECTION (05)

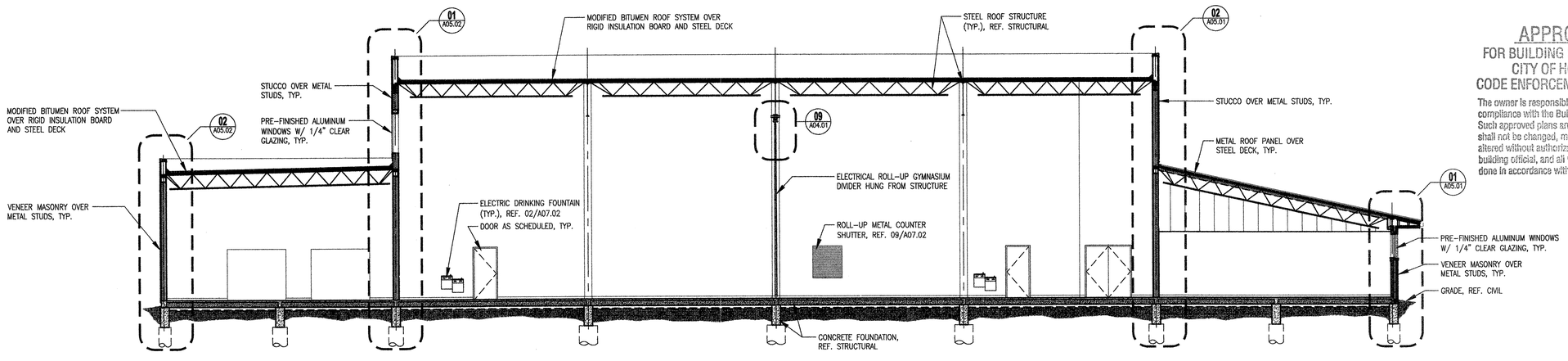

APPROVED
FOR BUILDING PERMIT ONLY
CITY OF HOUSTON
CODE ENFORCEMENT DIVISION
The owner is responsible for compliance with the Building Code. Such approved plans and specifications shall not be changed, modified or altered without authorizations from the building official, and all work shall be done in accordance with the approved plans.
NO. 368

0 8'0" 16'0"
SCALE: 1/8" = 1'0"

BUILDING SECTION (01)

Community Family Centers
Centros Familiares de la Comunidad

John P. McGovern, M.D.
Community Sports & Recreation Building
7318 AVENUE F
HOUSTON, TEXAS 77011

THATS ARCHITECTURE
2402 COMMONWEALTH #100, HOUSTON, TX 77006
TELEPHONE 713/222-1406 FAX 713/222-1506

STATE OF TEXAS REGISTERED ARCHITECT MARC GLASER DANIELSON 15004
4/18/06

ISSUES & REVISIONS	
09/16/06	ISSUE FOR PERMIT

SHEET TITLE
BUILDING SECTIONS

PROJECT NO. 2001-30
SCALE AS NOTED

SHEET NUMBER
A04.01