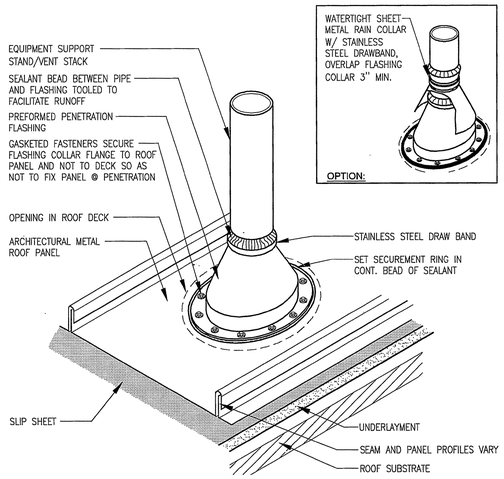

VENT STACK PENETRATION (12)

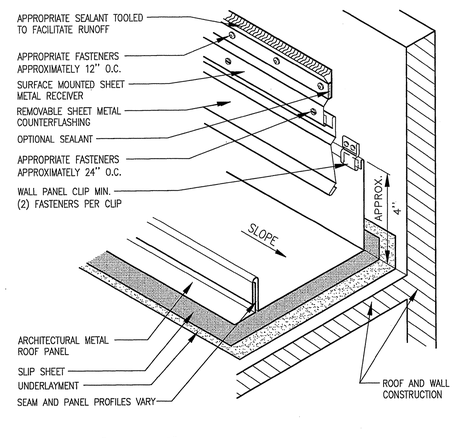

STANDING SEAM AT PARAPET (11)

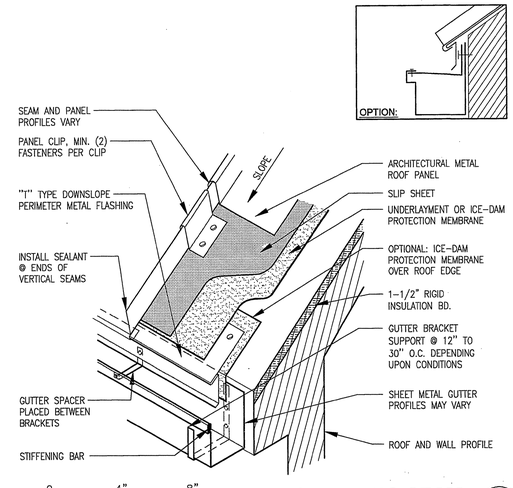

STANDING SEAM EDGE W/ GUTTER (10)

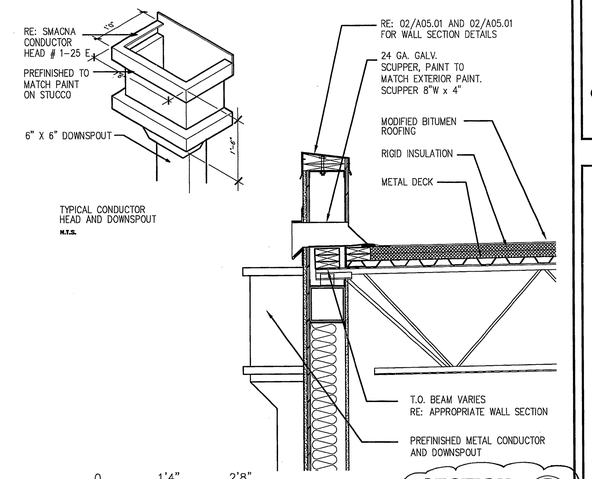

SECTION ROOF (09)

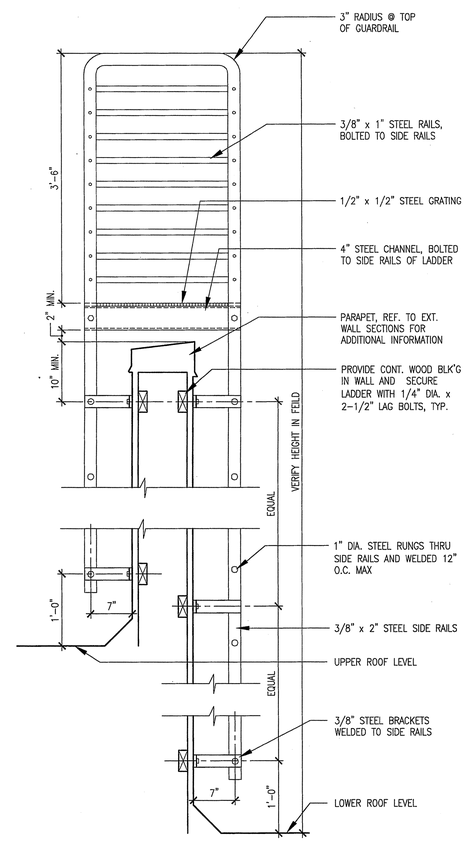

LOWER TO UPPER ROOF LADDER SECTION (04)

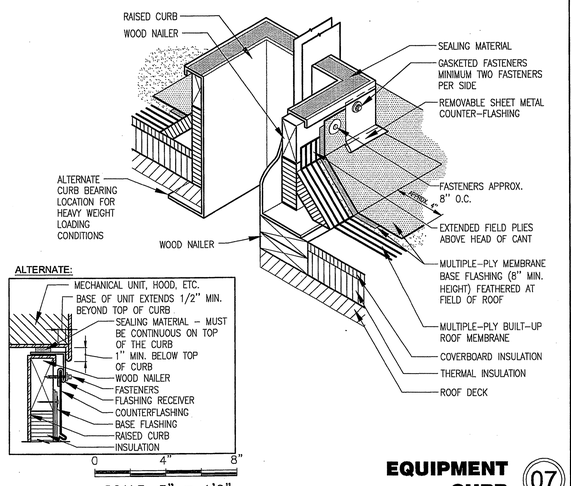

EQUIPMENT CURB (07)

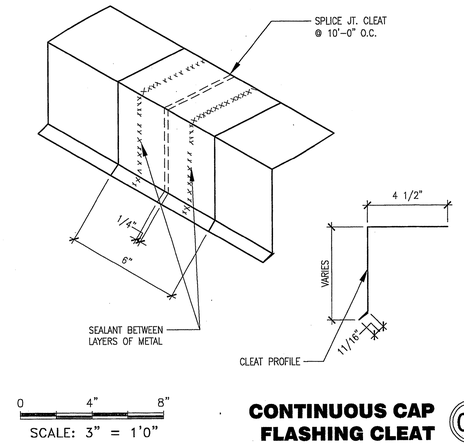

CONTINUOUS CAP FLASHING CLEAT (06)

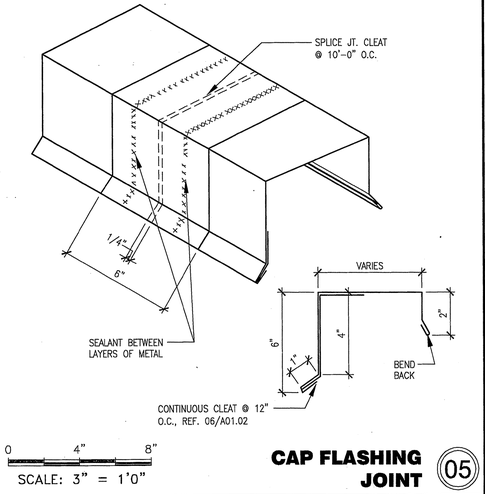

CAP FLASHING JOINT (05)

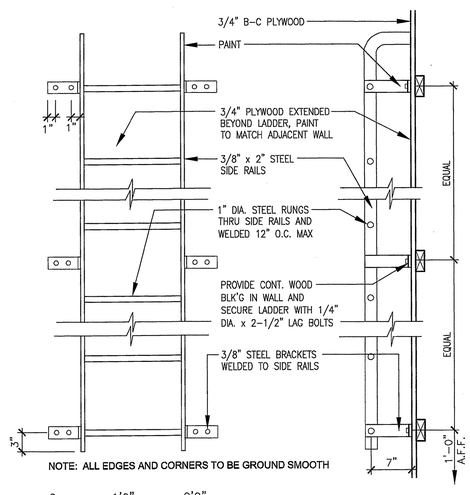

ROOF ACCESS LADDER SECTION (03)

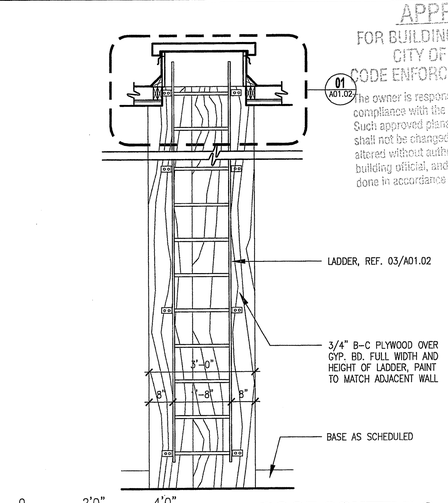

APPROVED
FOR BUILDING PERMIT ONLY
CITY OF HOUSTON
CODE ENFORCEMENT DIVISION
The owner is responsible for compliance with the Building Code. Such approved plans and specifications shall not be changed, modified or altered without authorization from the building official, and all work shall be done in accordance with the approved plans.
NO. 368

ROOF SCUTTLE & LADDER ELEVATION (02)

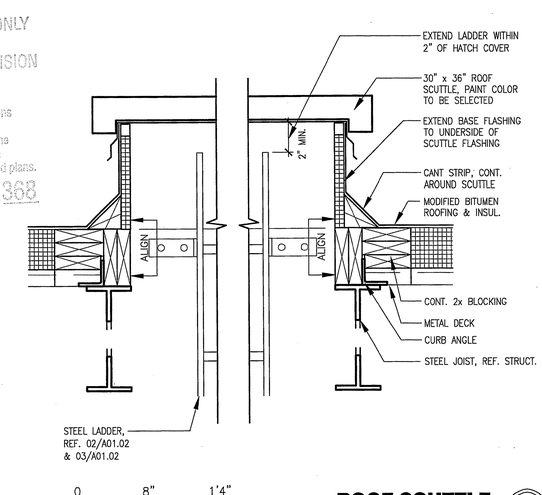

ROOF SCUTTLE SECTION (01)

Community Family Centers
Centros Familiares de la Comunidad

John P. McGovern, M.D.
Community Sports & Recreation Building
7318 AVENUE F
HOUSTON, TEXAS 77011

THAT'S ARCHITECTURE
2402 COMMONWEALTH #100, HOUSTON, TX 77006
TELEPHONE 713/222-1406 FAX 713/222-1506

REGISTERED ARCHITECT NANCY SLOCUM CAMPBELL 1004 STATE OF TEXAS
2/26/07

ISSUES & REVISIONS	
09/18/06	ISSUE FOR PERMIT
02/26/07	CITY COMMENTS

SHEET TITLE
ROOF DETAILS

PROJECT NO. 2001-30
SCALE AS NOTED

SHEET NUMBER
A01.02